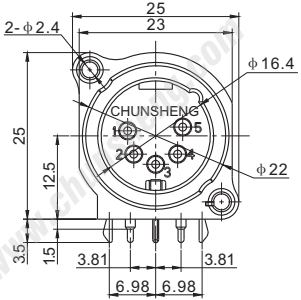

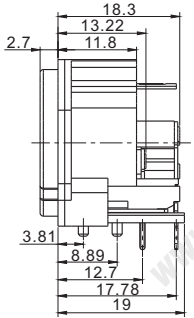

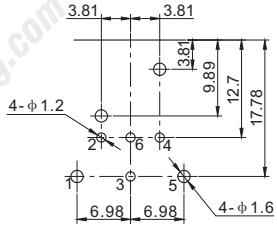

P.C.B LAYOUT
(VIEWED FROM COPPER SIDE)

CT5-02M

www.chunsheng.com