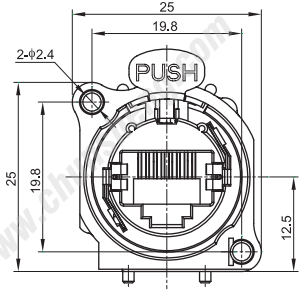

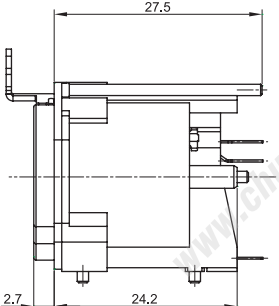

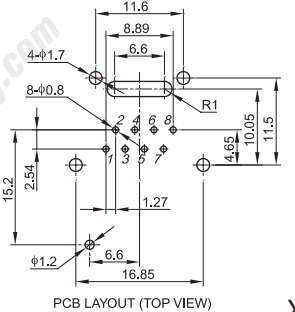

PCB LAYOUT (TOP VIEW)

XRJ45012-DP02R-02

www.chunsheng.com